

Profiles Design Aspirer

PDA

STEEL Art doors & windows private custom



Application of Steel doors and windows

Discover exclusive beauty through custom doors and windows, making your life distinctly unique.

PDA thermally broken steel profile doors and windows craft a singular world tailored just for you.



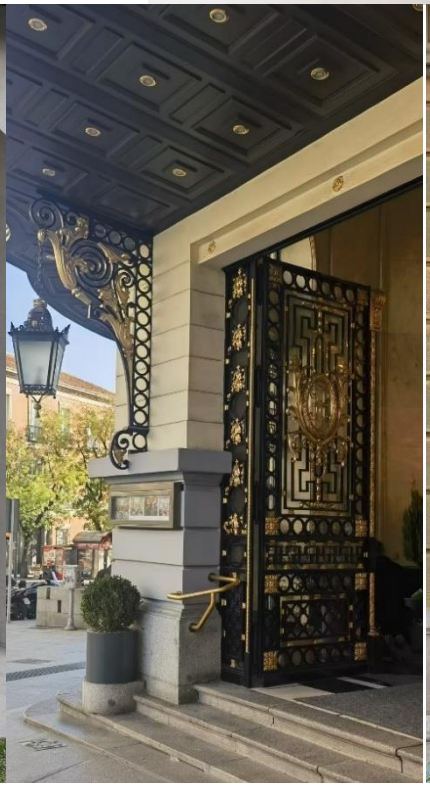



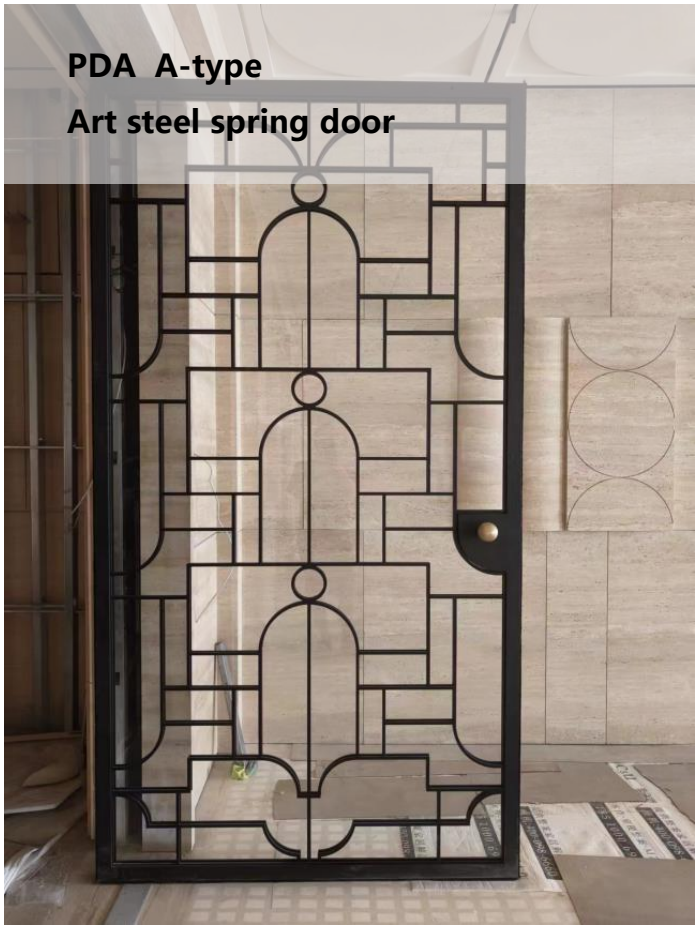

PDA A-type

Art steel spring door

Artistic carved patterns Created using 8mm thick aluminum plates for a seamless textured effect.

SLIM65 thermally broken steel spring door Node diagram

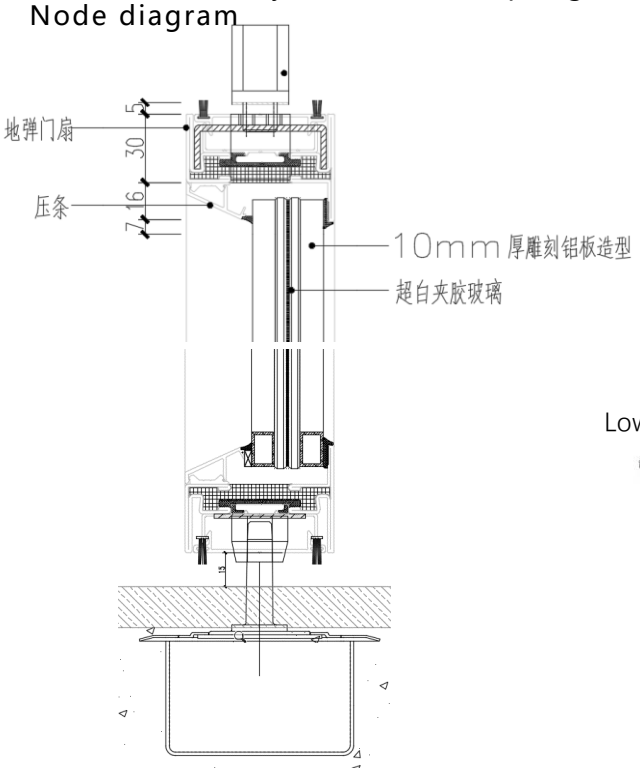

Low-iron laminated glass

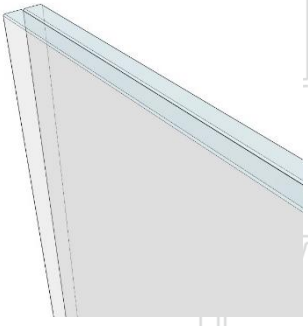

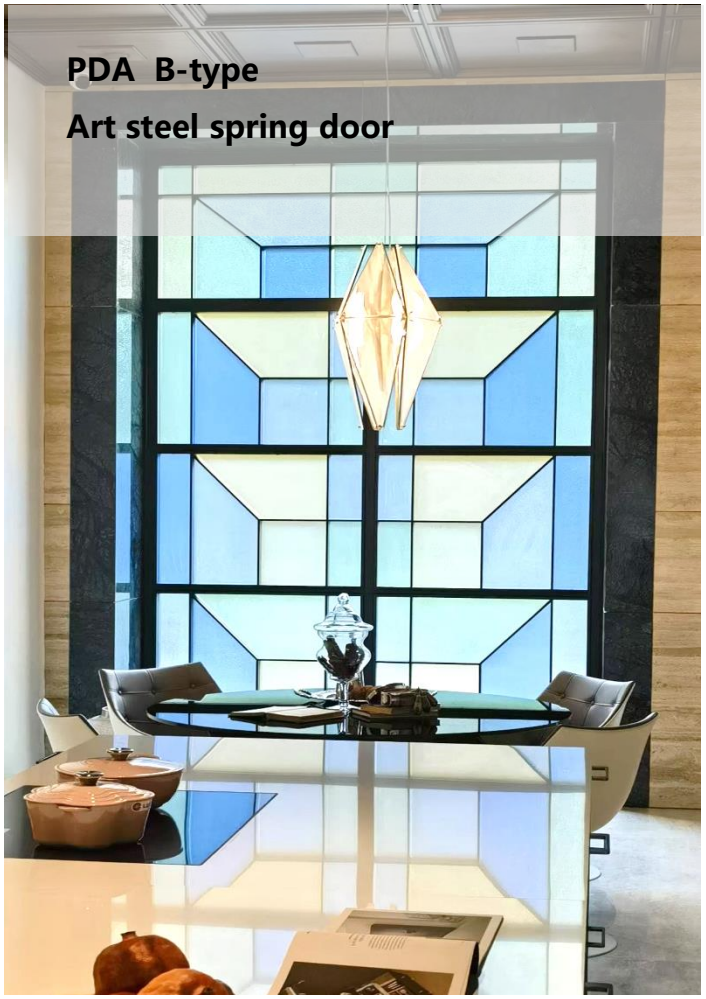

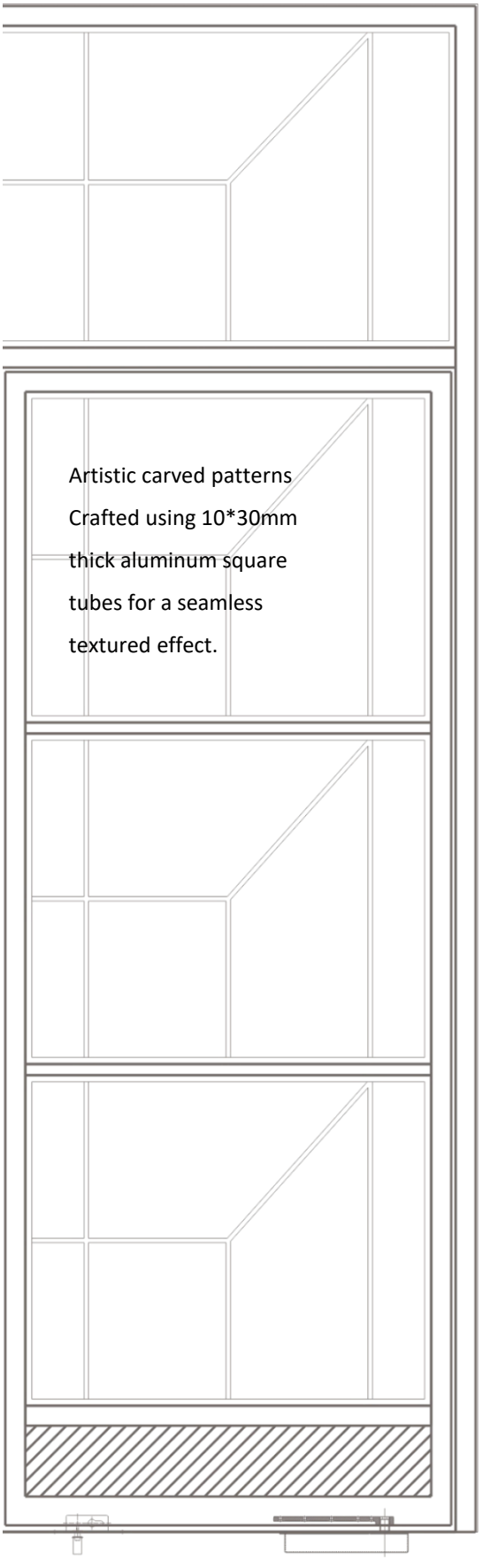

Artistic carved patterns
Crafted using 10*30mm thick aluminum square tubes for a seamless textured effect.

B-type steel spring door
Node diagram



Fragrant pear glass laminated with colored translucent film.

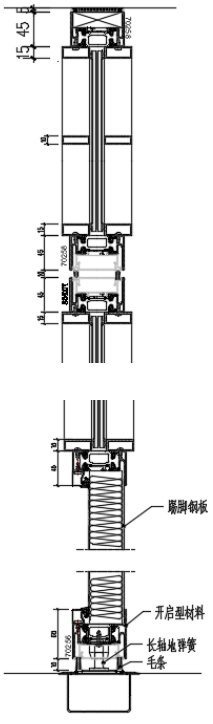

PDA C-type

Art steel spring door

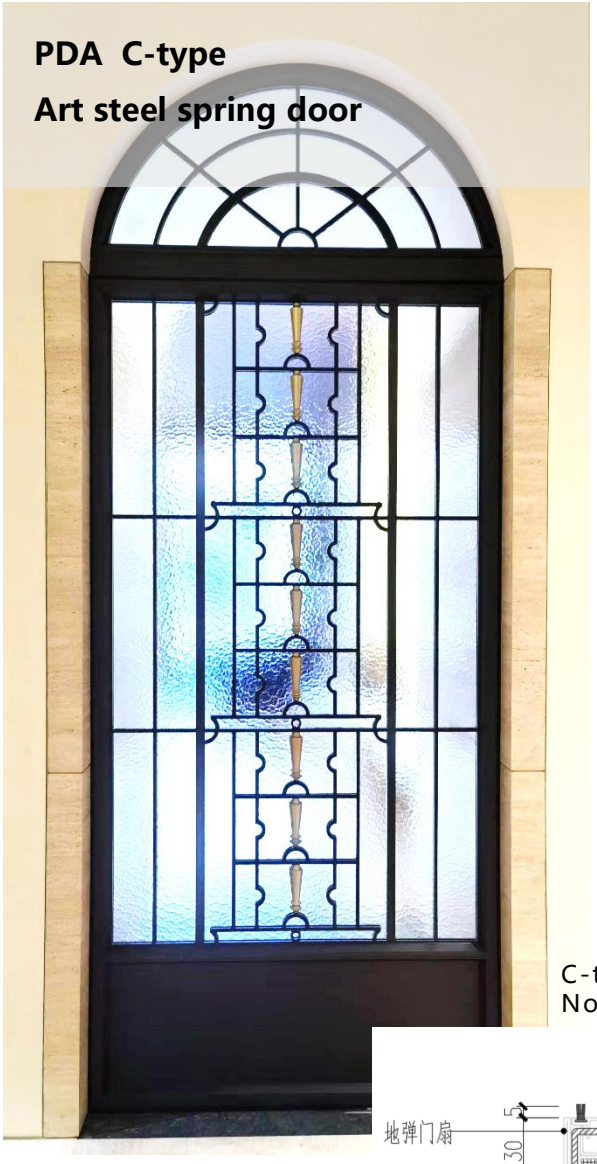

Artistic carved patterns Created using 8mm thick aluminum plates for a unified textured effect.

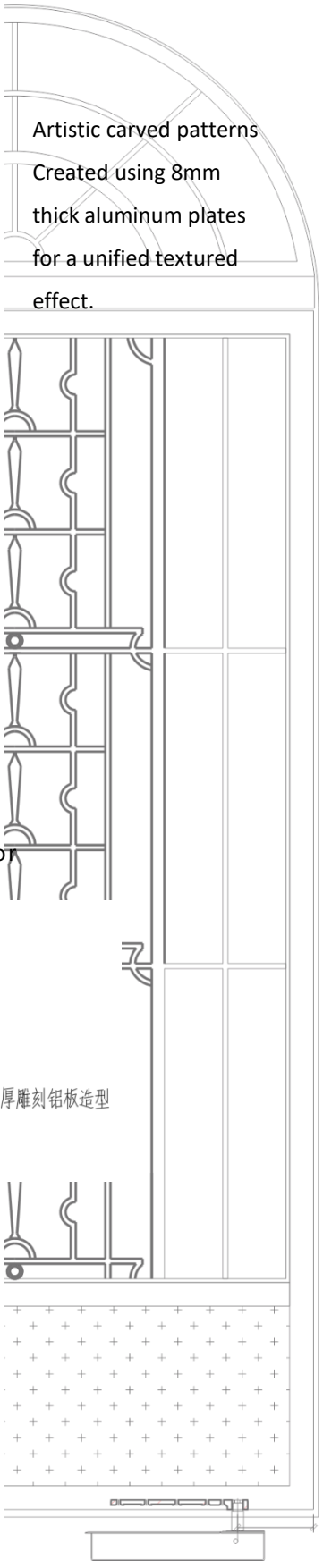

C-type steel spring door Node diagram

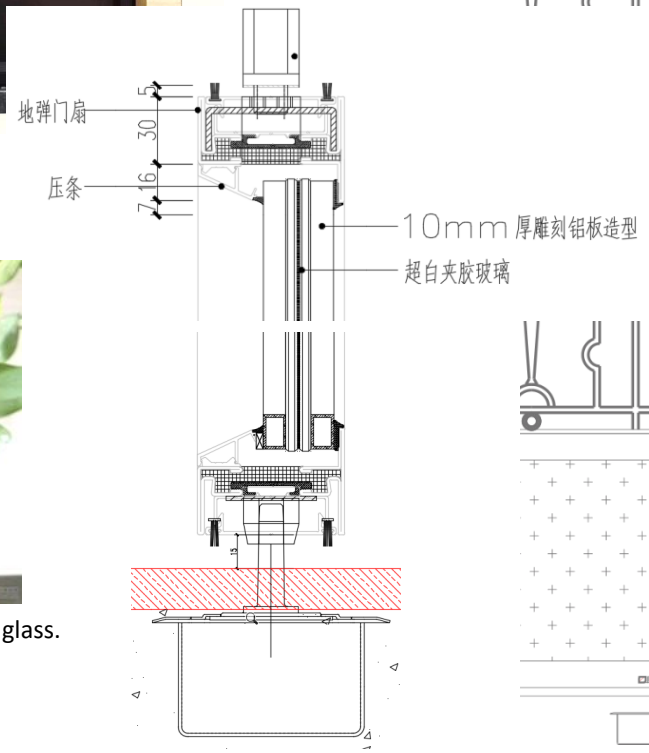



Laminated fragrant pear pattern glass.



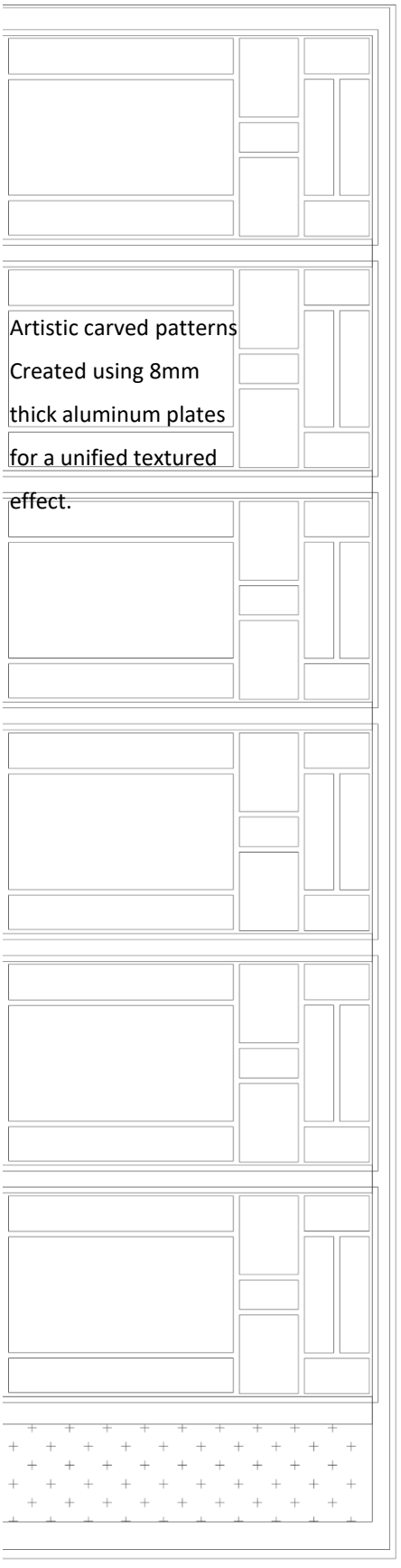

D-type steel spring door
Node diagram

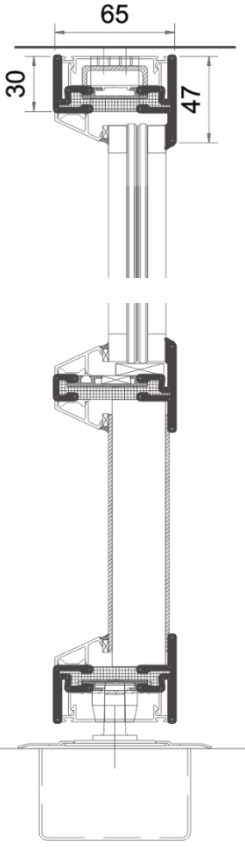



Fragrant pear glass laminated with colored translucent film.

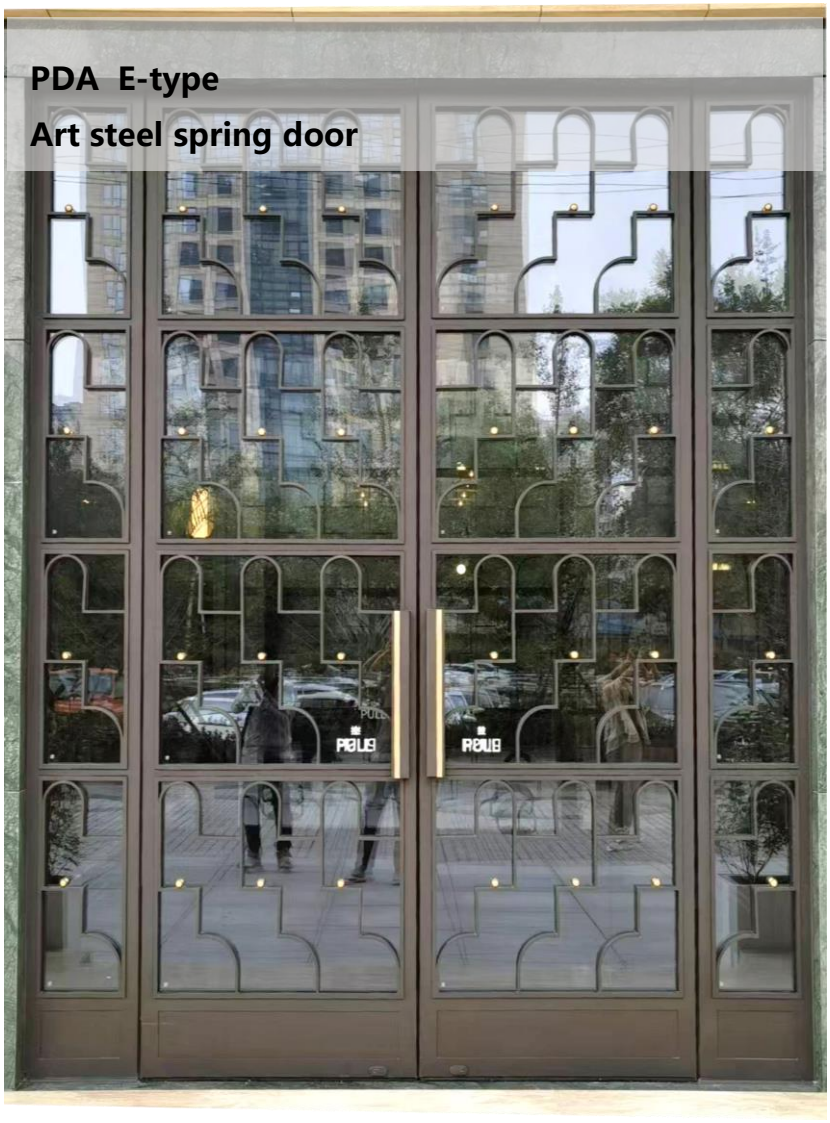

PDA E-type
Art steel spring door

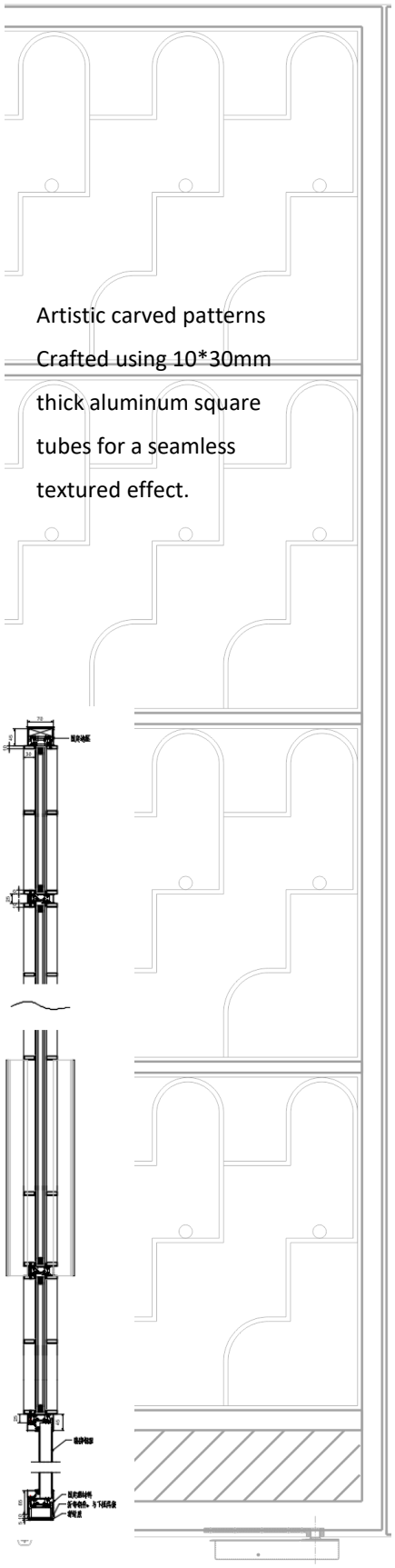

Artistic carved patterns Crafted using 10*30mm thick aluminum square tubes for a seamless textured effect.

E-type steel spring door Node diagram

24mm Low-iron insulated glass.

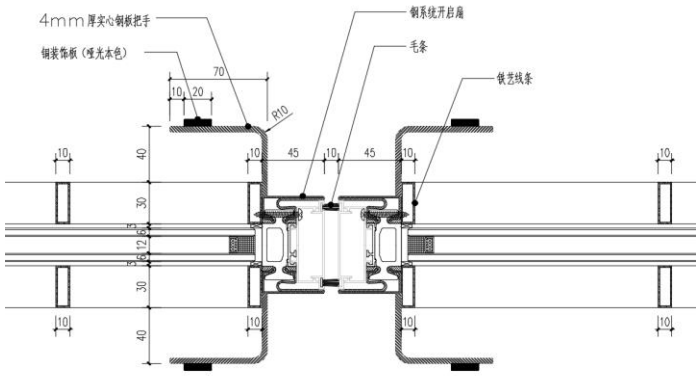



PDA website: www.international-pda.com
contact: International Business Manager: Yini Tao
E-mail: taoyini@eng-pda.com
Marketing Manager: Nancy Zhao
E-mail: zhh@eng-pda.com